# EICHER PRO 1075 F HSD

DCR38CBC 85B6M5 TT

| | |
|---|---|
| Manufacturing | : 11/2021 |
| No. Of Owners | : 1 |
| Duplicate Keys | : N/A |
| KM Driven | : 2,29,537 |
| Fuel Type | : DIESEL |
| Reg State | : Delhi |
| Reg City | : Delhi |
| Insurance Expiry | : 23/01/27 |
| RC Availability | : Yes |
| Permit | : National Permit |
| Permits Date Validity | : 30/01/2029 |

## VEHICLE DETAILS

| | | | |
|---|---|---|---|
| Registration Number | **DL 1L AB 9450** | RTO | **RAJPUR ROAD** |
| City | **Delhi** | RTO NOC Issued | **N/A** |
| Inspection At | **On-Site** | Under Hypothecation | **No** |
| Branch | **Delhi** | CNG/LPG Instalment | **No** |
| To be scrapped | **No** | Chassis Number Embossing | **Yes** |
| Manufacturing | **11/2018** | PUC Validity | **28/01/27** |
| Registration | **01/2019** | MV Tax (Upto) | **31/03/26** |
| Lifespan Remaining | **9 Months, 7 Years** | Fitness (Upto) | **05/02/27** |
| RC Mismatch if any | **No** | | |

# SUMMARY

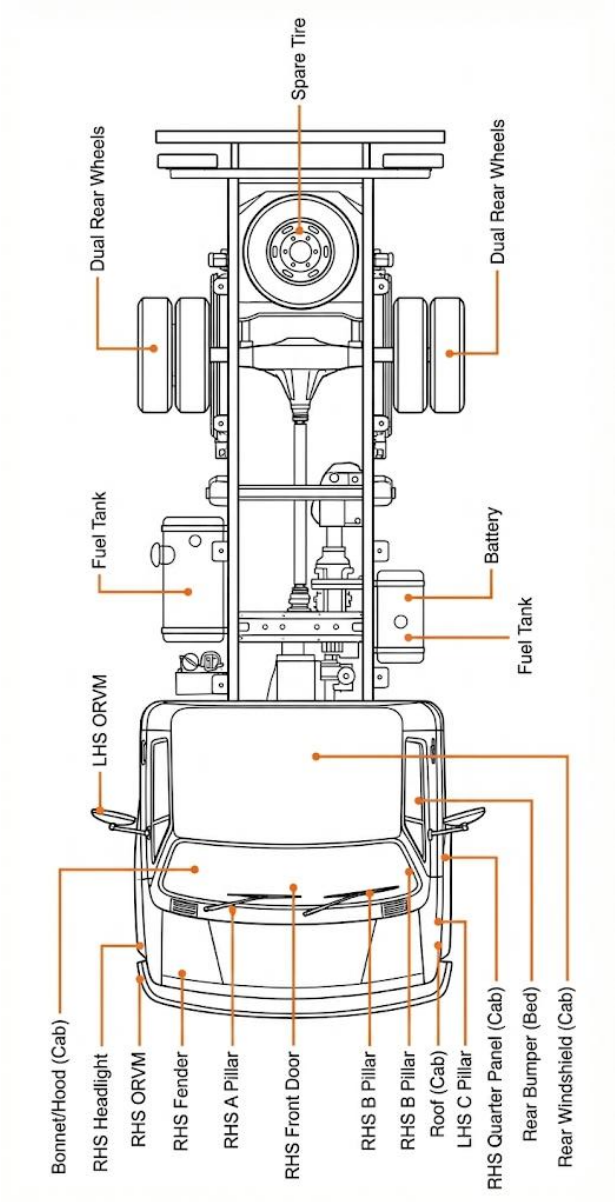


## Exterior + Tyres

| Part | Sub-Part | Status | Remarks / Condition |
|---|---|---|---|
| Bumper | Front / Rear | ! | LHS Front Bumper Slight Dent |
| Cabin Panels | LHS / RHS | ✓ | |
| Bonnet / Hood | — | ✓ | |

| | | | |
|---|---|---|---|
| Roof (Cab) | — | ✓ | |
| Fender | LHS / RHS | ✓ | |
| Doors | LHS / RHS | ✓ | |
| Windshield | Front / Rear | ✓ | |
| Pillars | A / B / C | ✓ | |
| Load Body Floor | — | ✓ | |
| Side Panels | — | ✓ | |
| Tailgate | — | ✓ | |
| Chassis Visible Area | — | ✓ | |
| Tyre | 1 | ✓ | 70-80% |
| Tyre | 2 | ✓ | 70-80% |
| Tyre | 3 | ✓ | 60-70% |
| Tyre | 4 | ✓ | 60-70% |
| Tyre | 5 | ✓ | 60-70% |
| Tyre | 6 | ✓ | 60-70% |
| Tyre | Spare | ✓ | 50-60% |
| Wheels / Rims | — | ✓ | |

## Electricals + Interior

| Part | Sub-Part | Status | Remarks / Condition |
|---|---|---|---|
| Battery | — | ✓ | |
| Wiring Harness | — | ✓ | |
| Headlights | LHS / RHS | ✓ | |
| Tail Lamps | LHS / RHS | ✓ | |
| Indicators | — | ✓ | |
| Horn | — | ✓ | |
| Instrument Cluster | — | ✓ | |
| Warning Lights | — | ✓ | |
| Dashboard | — | ✓ | |
| Seats | Driver / Co-driver | ✓ | |
| Seat Belts | — | ✓ | |
| Cabin Fan / Blower | — | ✓ | |
| Wipers | — | ✓ | |

## Engine + Transmission

| Part | Sub-Part | Status | Remarks / Condition |
|---|---|---|---|
| Cold Start | — | ✓ | |

| | | | |
|---|---|---|---|
| Idling | — | ✓ | |
| Blow-by | Dipstick Test | ✓ | |
| Exhaust Smoke | — | ✓ | |
| Engine Oil | — | ✓ | |
| Coolant | — | ✓ | |
| Oil Leakage | — | ✓ | |
| Fuel Injection | — | ✓ | |
| Turbocharger | — | ✓ | |
| Clutch | — | ✓ | |
| Gear Shifting | — | ✓ | |
| Gearbox Noise | — | ✓ | |
| Propeller Shaft | — | ✓ | |
| Differential | — | ✓ | |

## Steering / Suspension + Brakes

| Part | Sub-Part | Status | Remarks / Condition |
|---|---|---|---|
| Steering Free Play | — | ✓ | |
| Steering Box | — | ✓ | |
| Kingpin / Ball Joint | — | ✓ | |

| | | | |
|---|---|---|---|
| Leaf Springs | — | ✓ | |
| U-Bolts & Clamps | — | ✓ | |
| Shock Absorbers | — | ✓ | |
| Front Axle | — | ✓ | |
| Brake Pedal Feel | — | ✓ | |
| Brake Pull | — | ✓ | |
| Brake Lines | — | ✓ | |
| Parking Brake | — | ✓ | |

# Vehicle Photo Documentation Sheet

| PROFILE | PHOTOGRAPH |
|---|---|
| 1 | |
| 2 | |

| | |
|---|---|
| 3 | |
| 4 | |

| | |
|---|---|
| 5 | |
| 6 | |

| | |
|---|---|
| 7 | |
| 8 | |

| | |
|---|---|
| 9 | |
| 10 | |

| | |
|---|---|
| TYRE 1 | |
| TYRE 2 | |

| | |
|---|---|
| TYRE 3 | |
| TYRE 4 | |

| | |
|---|---|
| TYRE 5 | |
| TYRE 6 | 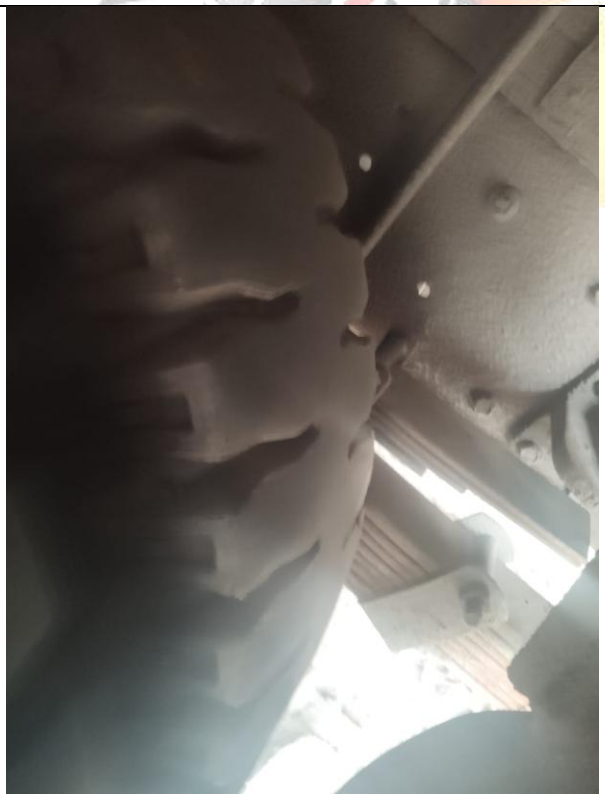 |

| | |
|---|---|
| TYRES | |